Solarlamp - Professional Line

XSolar L-S

antraciet
EAN 4007841 085698
art.nr. 085698
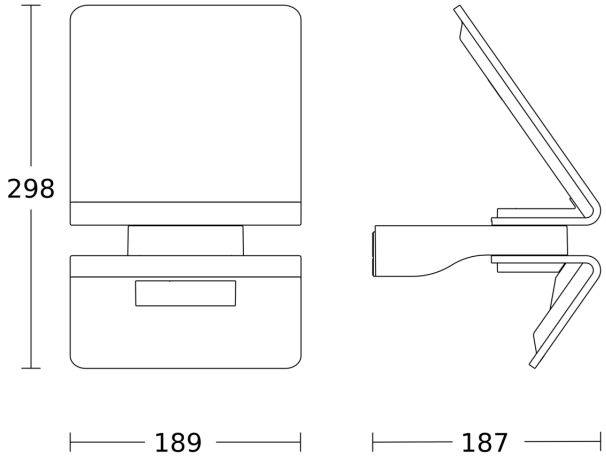
Maten